TECHNICAL DATASHEET

GROOVED ELBOW 22,50° | TYPE GB22

FIRE HVAC

Size range: 1" - 12"

GROOVED ELBOW

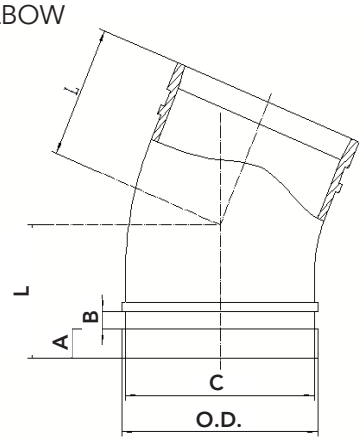

FM APPROVED

CNBOP-PIB

Grooved elbows provide an economical and efficient method of changing direction in grooved piping systems.

Reference		Nominal size		Pipe Ø O.D.	Grooved elbow 22,50° dimensions				Weight	Marking	Approval	
Red	Galva	NPS inch	DN mm	mm	L mm	A mm	B mm	C mm	kg		UL	FM
GB22R	GB22G	1	25	33,7	38,5	15,9	7,9	30,2	0,32	GBT22	UL	FM
GB22R	GB22G	1¼	32	42,4	44	15,9	7,9	39,0	0,36	GBT22	UL	FM
GB22R	GB22G	1½	40	48,3	44	15,9	7,9	45,1	0,36	GBT22	UL	FM
GB22R	GB22G	2	50	60,3	48	15,9	7,9	57,2	0,53	GBT22	UL	FM
GB22R	GB22G	2½	65	73,0	51	15,9	7,9	69,1	0,70	GBT22	UL	FM
GB22R	GB22G	2½	65	76,1	51	15,9	7,9	72,3	0,71	GBT22	UL	FM
GB22R	GB22G	3	80	88,9	57	15,9	7,9	84,9	0,97	GBT22	UL	FM
GB22R	GB22G	4	100	108,0	73	15,9	9,5	103,7	1,50	GBT22	UL	FM
GB22R	GB22G	4	100	114,3	73	15,9	9,5	110,1	1,50	GBT22	UL	FM
GB22R	GB22G	5	125	133,0	73	15,9	9,5	129,1	2,15	GBT22		FM
GB22R	GB22G	5	125	139,7	73	15,9	9,5	135,5	2,20	GBT22	UL	FM
GB22R	GB22G	5	125	141,3	73	15,9	9,5	137,0	2,23	GBT22	UL	FM
GB22R	GB22G	6	150	159,0	79	15,9	9,5	154,5	2,97	GBT22	UL	FM
GB22R	GB22G	6	150	165,1	79	15,9	9,5	160,9	2,99	GBT22	UL	FM
GB22R	GB22G	6	150	168,3	79	15,9	9,5	164,0	3,00	GBT22	UL	FM
GB22R	GB22G	8	200	219,1	83	19,1	11,1	214,4	5,66	GBT22	UL	FM
GB22R	GB22G	10	250	273,0	111	19,1	12,7	268,3	10,45	GBT22	UL	FM
GB22R	GB22G	12	300	323,9	124	19,1	12,7	318,3	14,23	GBT22	UL	FM

Material specifications

Housing: ductile iron conform to ASTM A536 Grade 65-45-12 (EN-GJS-450-10).

Coating:

- Hot dip galvanised.
- Red paint coating RAL 3000, epoxy powder coating (any other colour on request).

Working pressure

- **Sprinkler applications (water-based fire protection systems):**
  Maximum working pressure 1" - 4": 2,76 MPa / 27,6 bar / 400 psi; 5" - 12": 2,07 MPa / 20,7 bar / 300 psi, in accordance with applicable product certifications (e.g. FM, UL) and system standards (e.g. NFPA 13, EN 12845, APSAD).
- **Other media and non-sprinkler applications:**
  The allowable working pressure depends on the fluid group and application and shall be determined in accordance with Directive 2014/68/EU (PED) and applicable technical documentation (available on Profit website CSTB certifications).
  These products are typically classified under Article 4(3) (Sound Engineering Practice - SEP) and are not CE-marked.
  The applicable PED category depends on system parameters and must be verified by the system designer.
  These products are not intended for use with gases classified in Group 1 (hazardous media according to PED).
  Such applications fall outside the scope of this datasheet.
- **Vacuum resistance (all media except gas group 1):**
  Suitable for vacuum applications. Tested down to -0,85 bar(g) in according to FM1920.
  For design purposes, a conservative limit of -0,55 bar(g) is recommended.

Approvals

- Sprinkler-specific:

FM APPROVED
FM standard
1920

UL 213

CNBOP-PIB

GENERAL INFO

- Installers should be trained or experienced to install and understand the product.
- Before installation, carefully check the product on any damage during shipment or handling.
- Read and understand all technical datasheets and installation instructions before attempting to install, remove or adjust any Profit products.
- Check if the pressure rating of the product is compatible with the service conditions.
- Depressurise and drain the sprinkler installation system before attempting to install, remove or adjust any Profit products.
- Never work on piping systems that are pressurised and / or filled with water or pressurised air.
- Piping Logistics reserves the right to change specifications, designs and / or standard equipment without notice and without incurring in any obligations.
- Use the necessary Personal Protection Equipment (PPE) to avoid personal injury (helmet, safety shoes, goggles and gloves).

- Profit paint coated products are intended for piping with category C1 and C2 environment (indoor). For installations in category C3 we advise the use of our hot dip galvanised couplings and fittings. For application in corrosivity category C4 (higher salinity climate) or higher, please contact info@pipinglogistics.eu. (Classification according to ISO 9223)
- Pressure ratings listed for fire sprinkler applications are CWP (cold working pressure) or MWP (maximum working pressure) at a maximum service temperature of 66°C. This rating may occasionally differ from maximum working pressure listed and / or approved by UL and / or FM, as testing conditions and test pipes can differ. For more information, please contact info@pipinglogistics.eu.
- Maximum working pressure listed is the total of internal and external pressures based on standard weight (ANSI) steel pipe and standard roll or cut groove in accordance with Profit specifications. For more information, please contact info@pipinglogistics.eu.
- For more information on allowed pressures and temperatures related to HVAC applications please contact info@pipingslogistics.eu.
- For a onetime commissioning test only, the maximum joint working pressure may be increased to 150% of the working pressure.

Failure to follow these instructions could result in property damage, serious injury or death.

Our product must always be stored in closed and dry environments. Once installed on an above ground sprinkler system, they require no specific maintenance.

REVISION TABLE

Date	△	Notes
28/09/2026		Initial release.